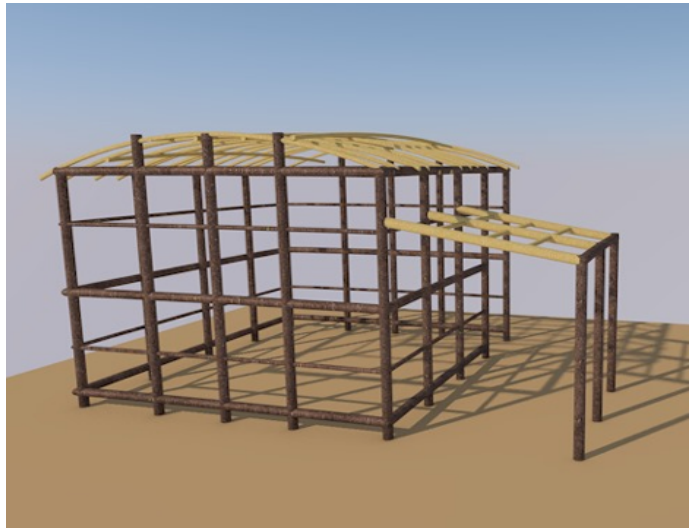

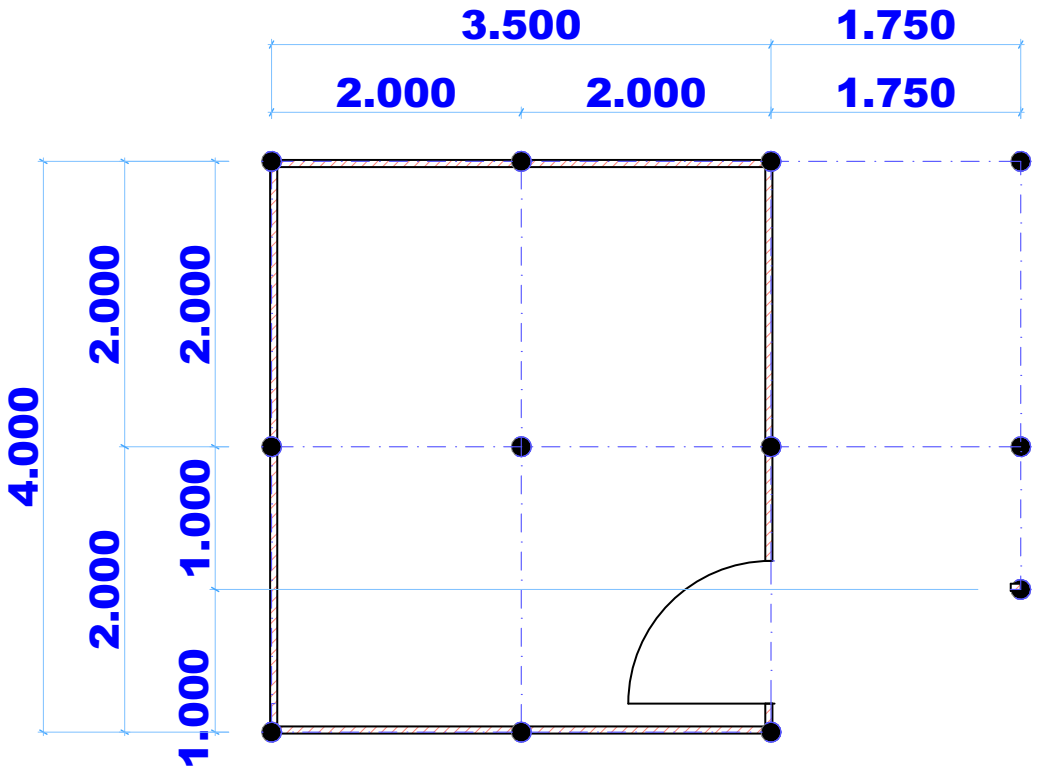

PLAN



